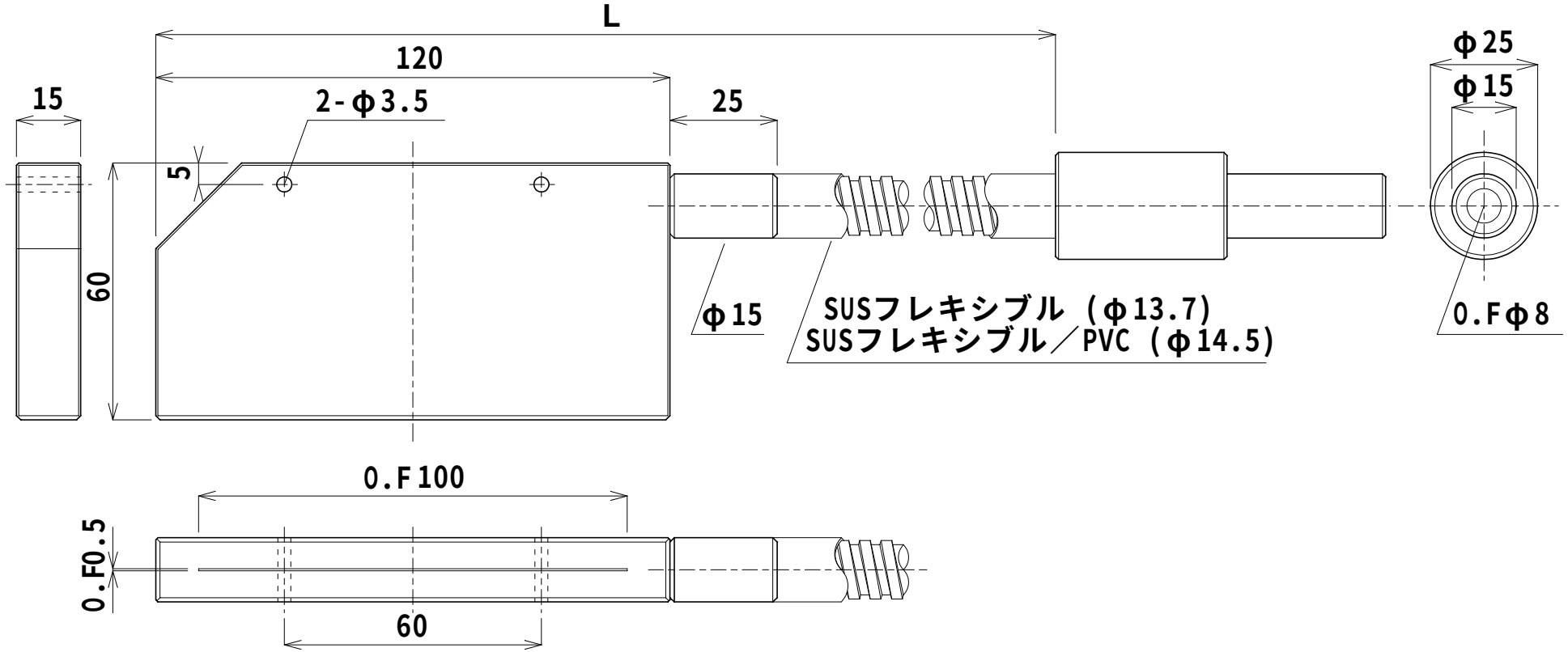

MATERIAL	FINISH	TOLERANCE	SCALE	DATE	TITLE
		±	/	/ /	型式
QUANTITY	DESIGNED	DRAWN	CHECKED	APPROVED	1LS100-(L)F(P)-1G8-M-R( )
OPTEL Co,.Ltd.					DRAWING NUMBER C－024