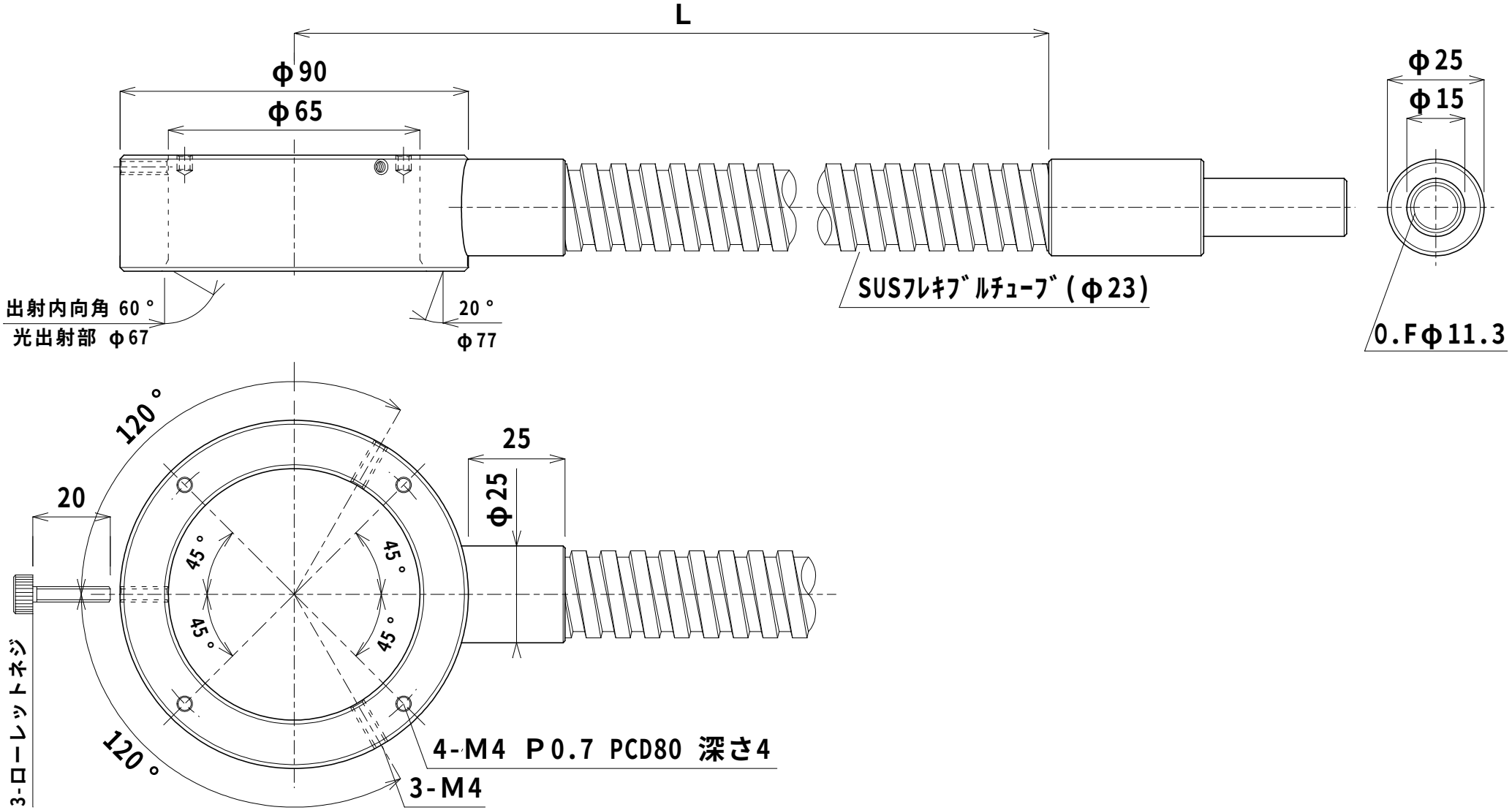

MATERIAL	FINISH	TOLERANCE	SCALE	DATE	TITLE
		±	/	/ /	型式
QUANTITY	DESIGNED	DRAWN	CHECKED	APPROVED	1DR65-(L)F-1G11.3-M-R( )
OPTEL Co,.Ltd.					DRAWING NUMBER C－048